SUMMERSET
PROFESSIONAL GRILLS

Madera 30x20" Wood Integrated Stainless Steel Horizontal Dry Storage Pantry

Model	**SSMP-30DC**
Cutout Dimensions*	**W28" x H17 1/2" x D22 5/8"**
Overall Dimensions**	**W30" x H20" x D23 5/8"**

#304 North American Stainless Steel Construction

Sustainably Sourced Teak or Ipe Option

Wood Specifications Available for Customization

Removable Bracket for Wood Extraction and Maintenance

Easy Glide Rail System w/ Soft Closure Feature

Adjustable Height Interior Shelves

Magnetic Latch and Weather Resistant Gasket for Dry Storage Seal

*** Manufacturer Suggested Cutout Dimensions**

**** Manufacturer Approximate Overall Dimensions**

NOTES

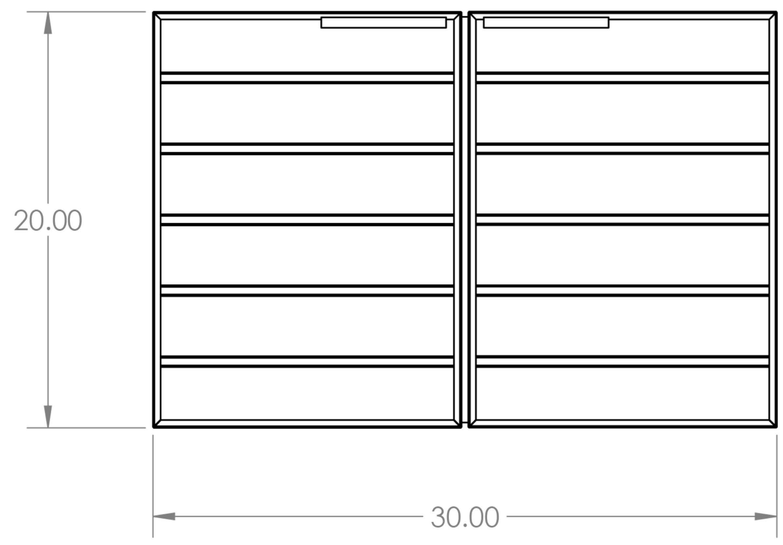

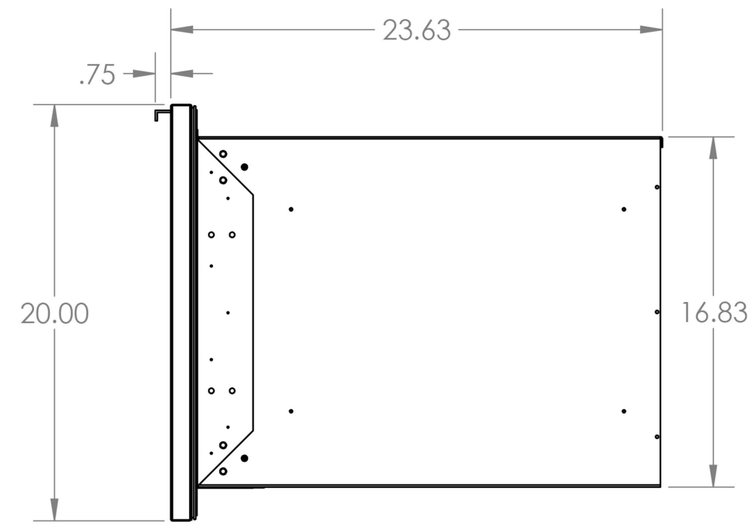

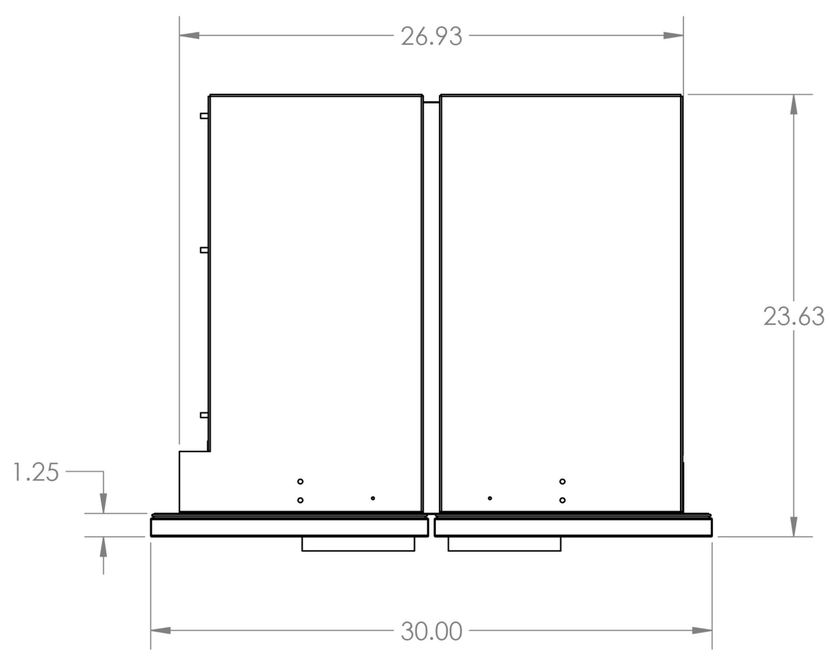

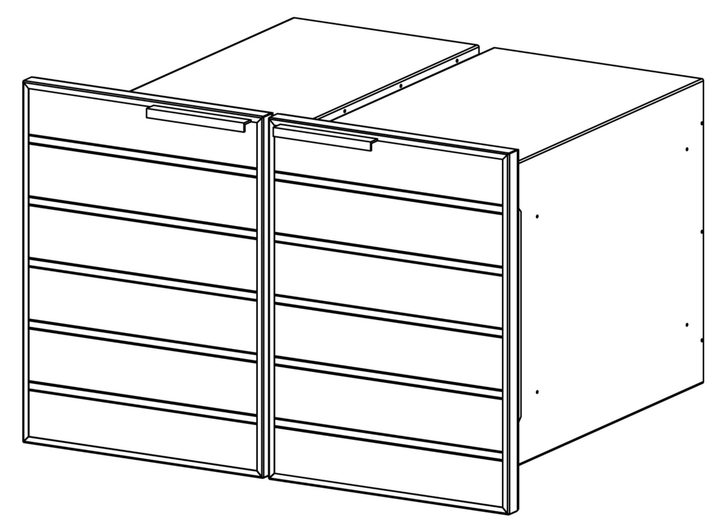

Suggested Cutout Dimensions*

(W) 28" x (H) 17 1/2" x (D) 22 5/8"

Island Front View

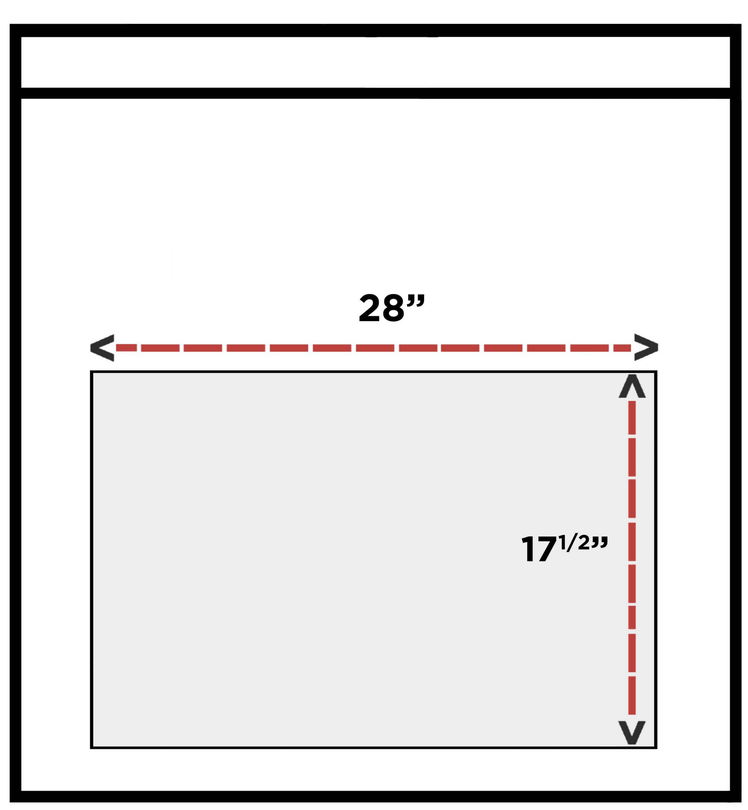
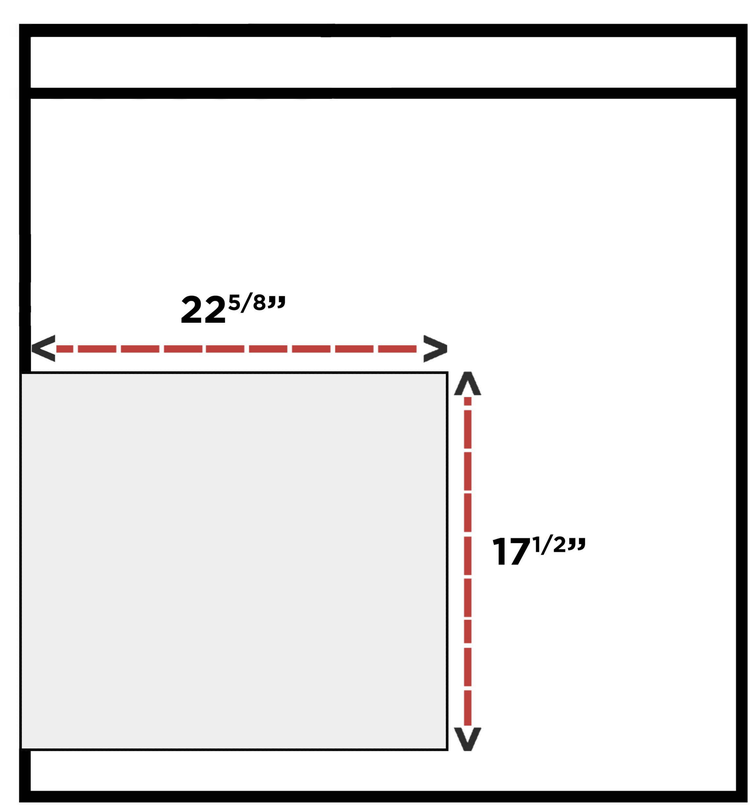
Island Side View