SUMMERSET
PROFESSIONAL GRILLS

Madera 40x34" Integrated Stainless Steel Full Height Vertical Dry Storage Pantry

Model	**SSMP-40V**
Cutout Dimensions*	W38 3/4" X H31" X D24 1/2"
Overall Dimensions**	W40" X H33 5/8" X D25 1/2"

- **#304 North American Stainless Steel Construction**
- **Sustainably Sourced Teak or Ipe Option**
- **Wood Specifications Available for Customization**
- **Removable Bracket for Wood Extraction and Maintenance**
- **Easy Glide Rail System w/ Soft Closure Feature**
- **Door Storage Shelves**
- **Magnetic Latch and Weather Resistant Gasket for Dry Storage Seal**
- **Adjustable Height Interior Shelves**

*** Manufacturer Suggested Cutout Dimensions**

**** Manufacturer Approximate Overall Dimensions**

NOTES

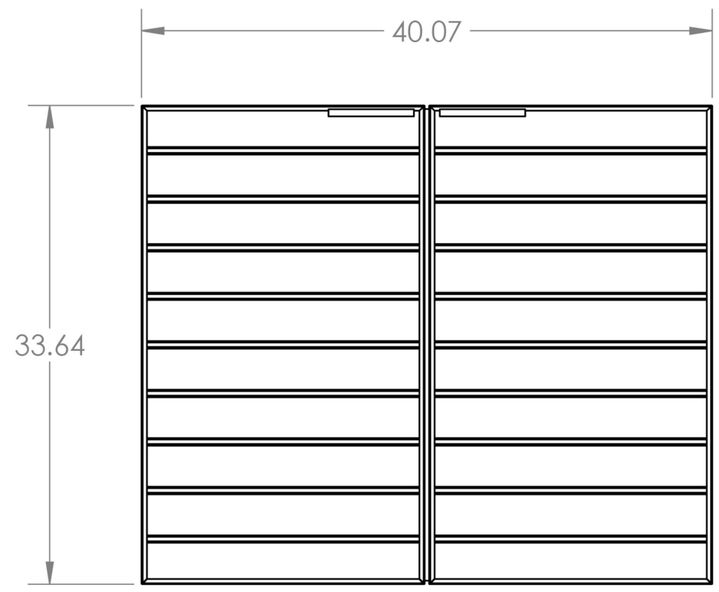

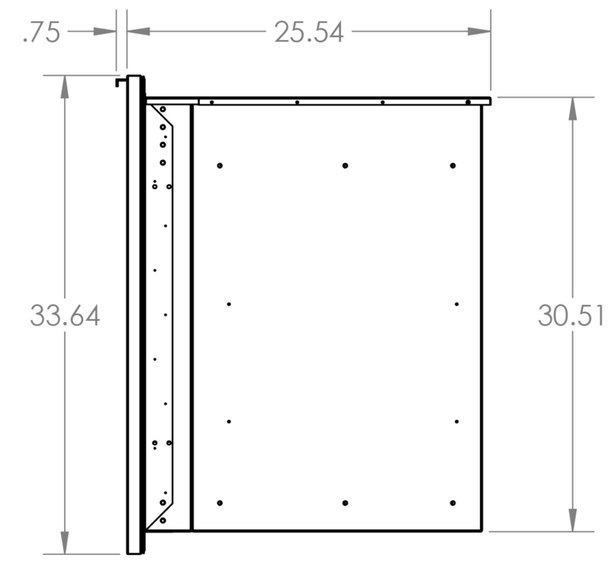

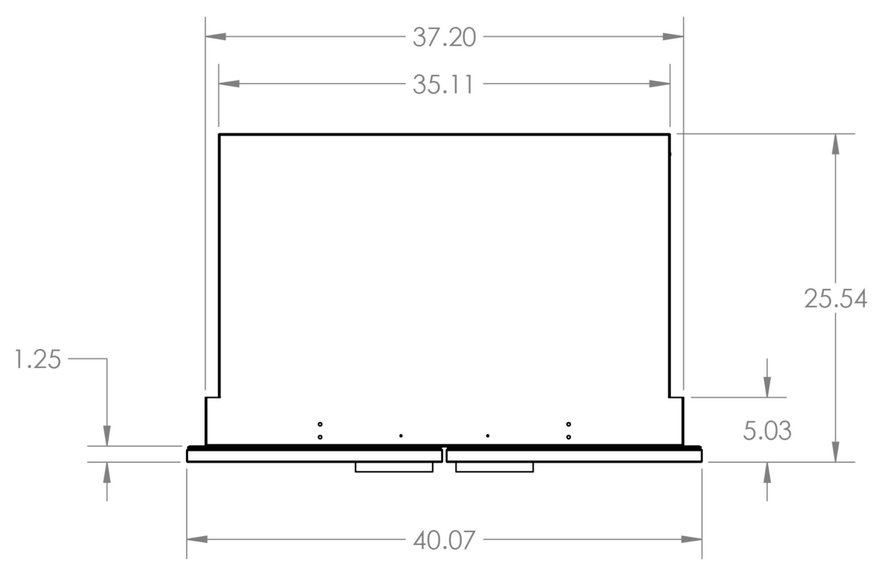

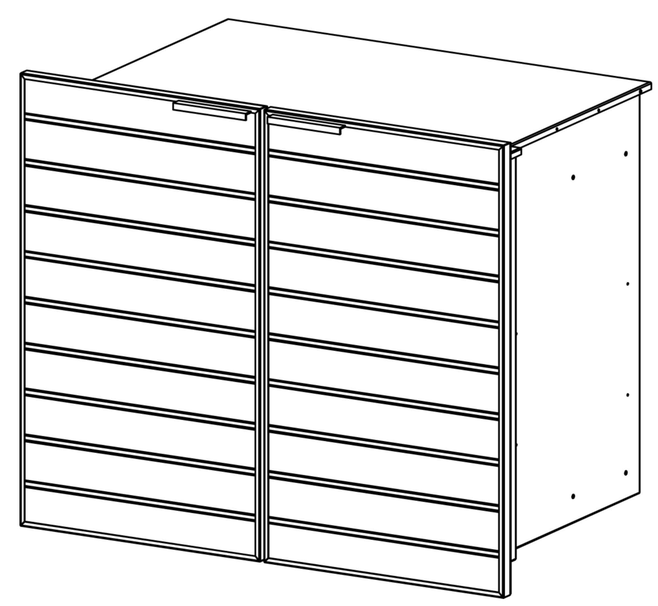

Suggested Cutout Dimensions*

(W) 38 3/4" x (H) 31" x (D) 24 1/2"

Island Front View

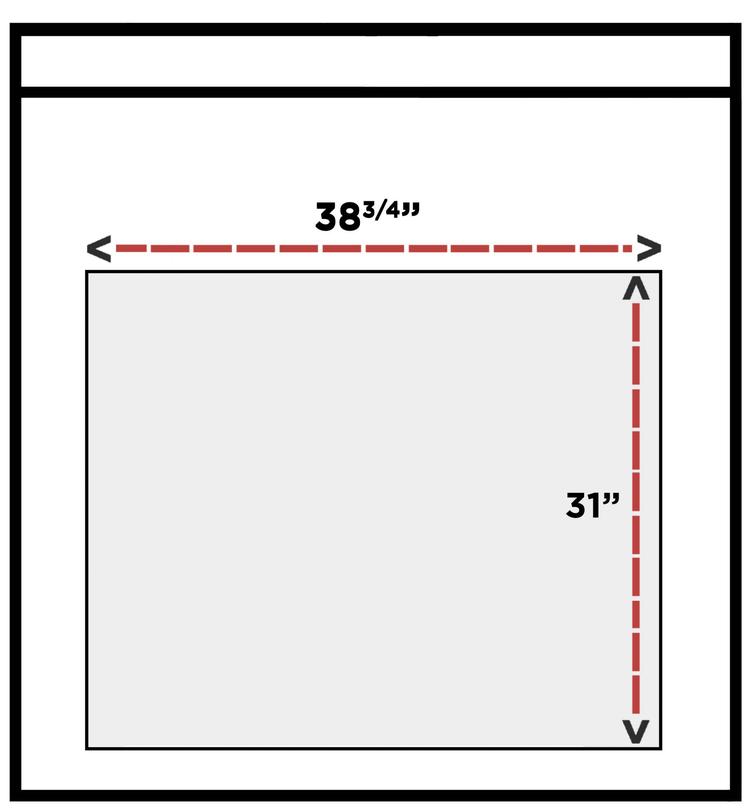
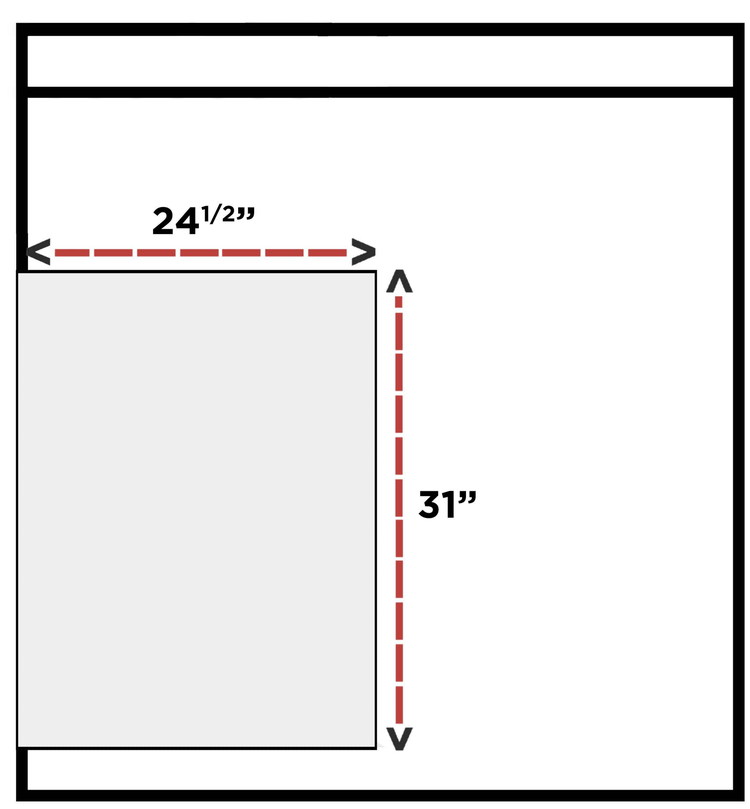
Island Side View