SUMMERSET
PROFESSIONAL GRILLS

Madera 20x34" Wood Integrated Stainless Steel Vertical Dry Storage Pantry

Model	**SSMP-20V**
Cutout Dimensions*	**W17 5/8" x H31" x D24 1/2"**
Overall Dimensions**	**W20" x H33 5/8" x D25 1/2"**

- **#304 North American Stainless Steel Construction**
- **Sustainably Sourced Teak or Ipe Option**
- **Wood Specifications Available for Customization**
- **Removable Bracket for Wood Extraction and Maintenance**
- **Easy Glide Rail System w/ Soft Closure Feature on Interior Drawers**
- **Adjustable Height Interior Shelf**
- **Door Storage Shelf**
- **Magnetic Latch and Weather Resistant Gasket for Dry Storage Seal**

*** Manufacturer Suggested Cutout Dimensions**

**** Manufacturer Approximate Overall Dimensions**

NOTES

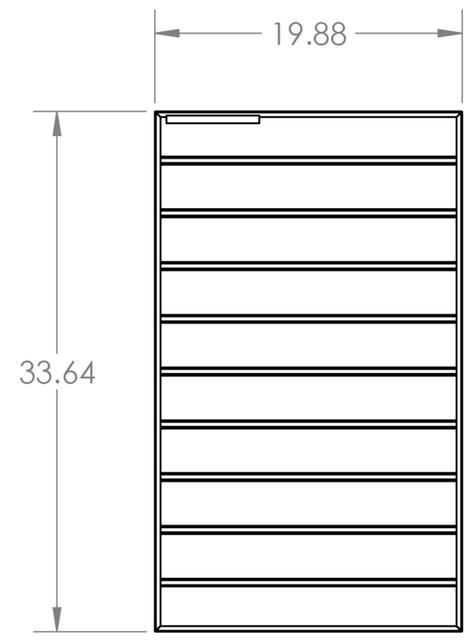

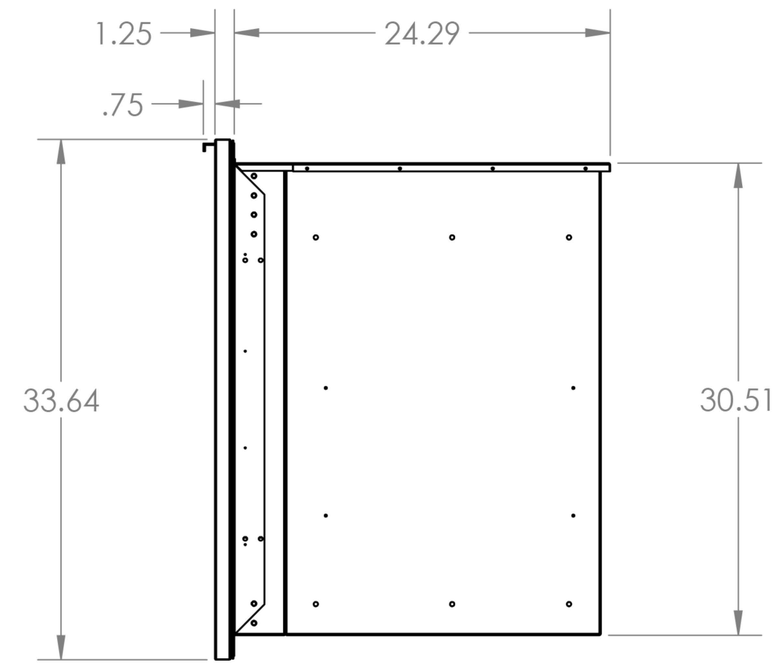

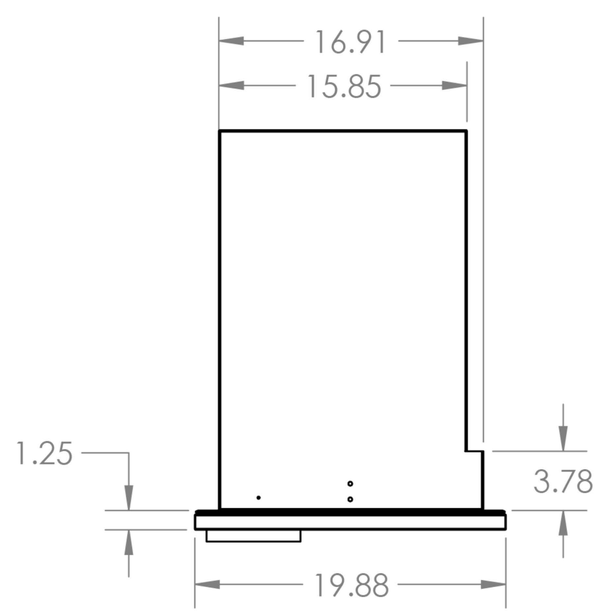

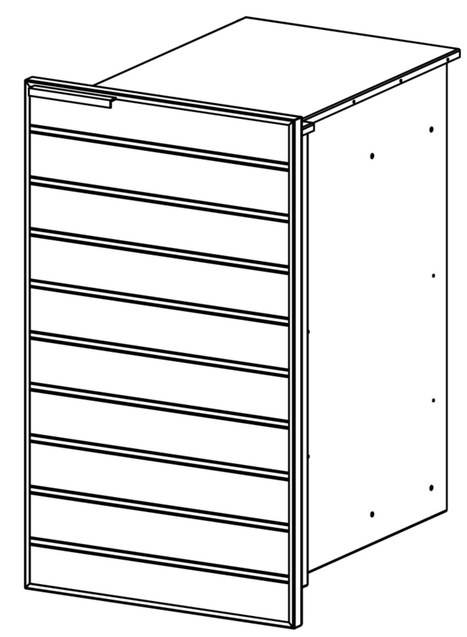

Suggested Cutout Dimensions*

(W) 17 5/8" x (H) 31" x (D) 24 1/2"

Island Front View

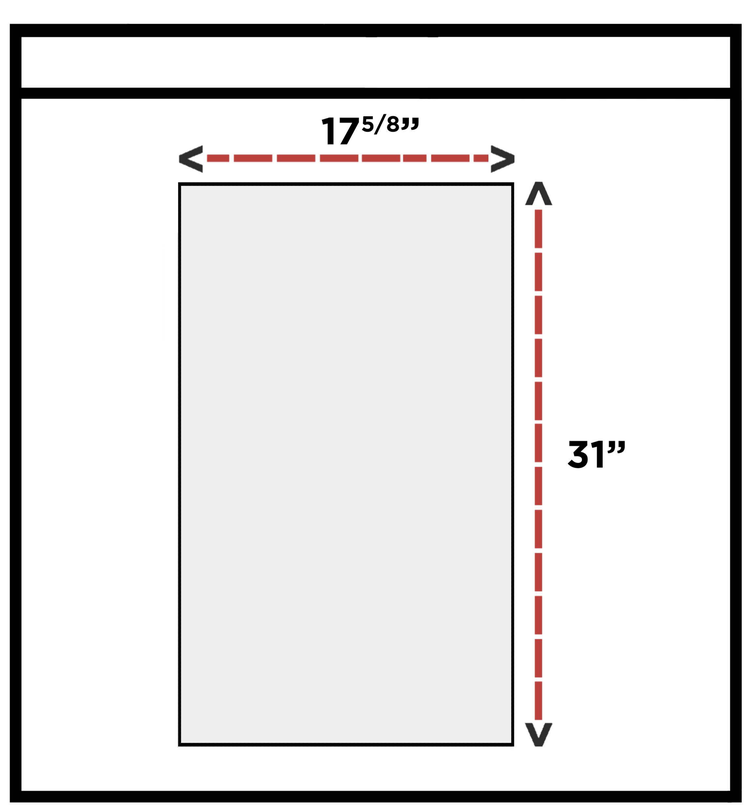
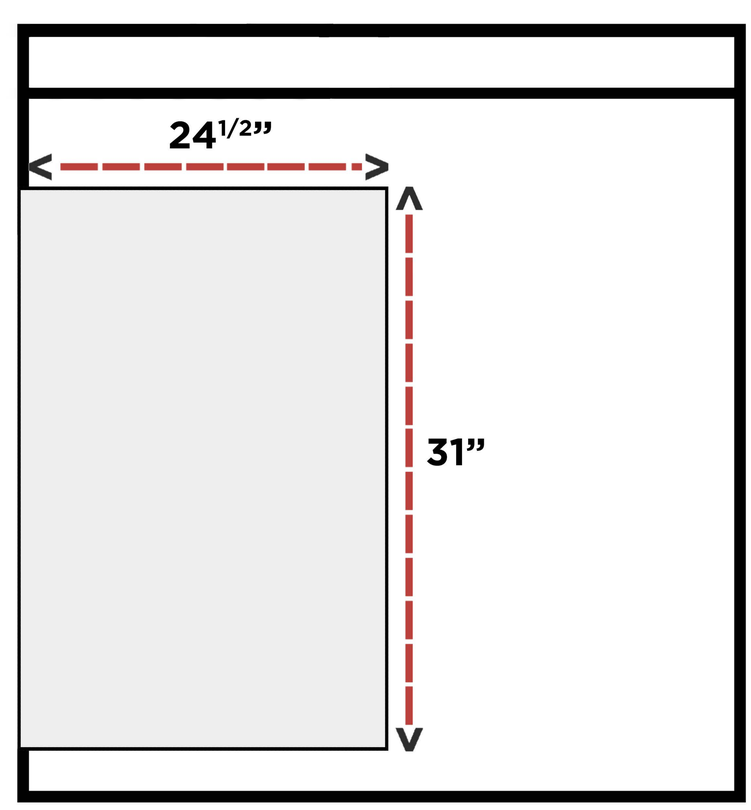
Island Side View