SUMMERSET
PROFESSIONAL GRILLS

20" Stainless Steel Trash or LP Tank Pullout Drawer w/ Masonry Frame Return

Model	**SSTD2-20**
Cutout Dimensions*	**W18" x H24 3/4" x D24 1/4"**
Overall Dimensions**	**W20" x H26 7/8" x D25 1/4"**

#304 North American Stainless Steel Construction

Sustainably Sourced Teak or Ipe Option

Wood Specifications Available for Customization

Removable Bracket for Wood Extraction and Maintenance

Easy Glide Rail System w/ Soft Closure Feature

Double Bin Trash Drawer

Magnetic Latch and Weather Resistant Gasket for Trash Drawer Seal

*** Manufacturer Suggested Cutout Dimensions**

**** Manufacturer Approximate Overall Dimensions**

NOTES

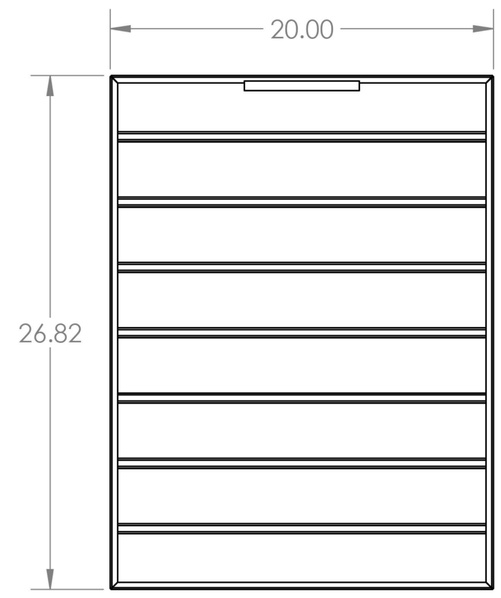

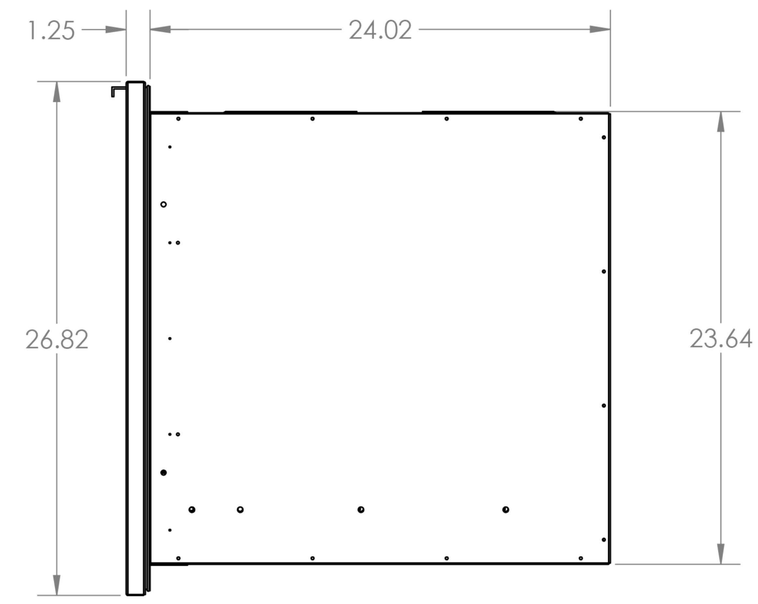

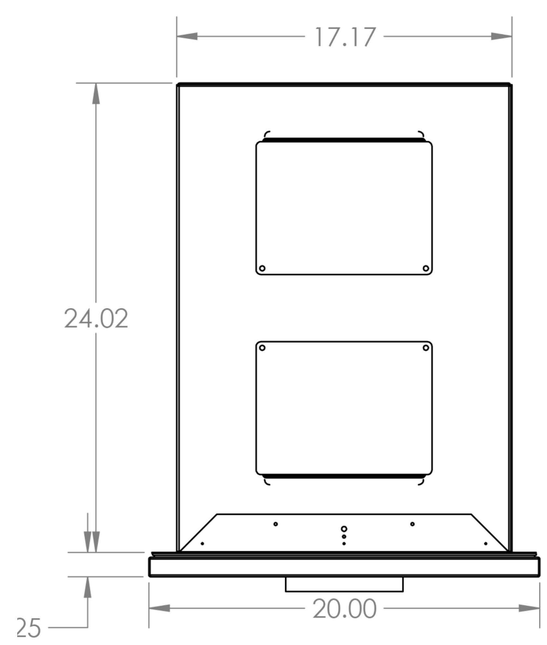

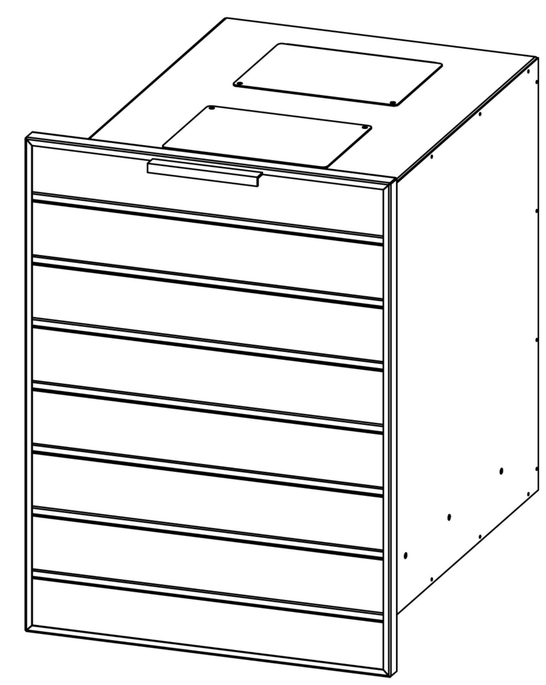

Suggested Cutout Dimensions*

(W) 18" x (H) 24 3/4" x (D) 24 1/4"

Island Front View

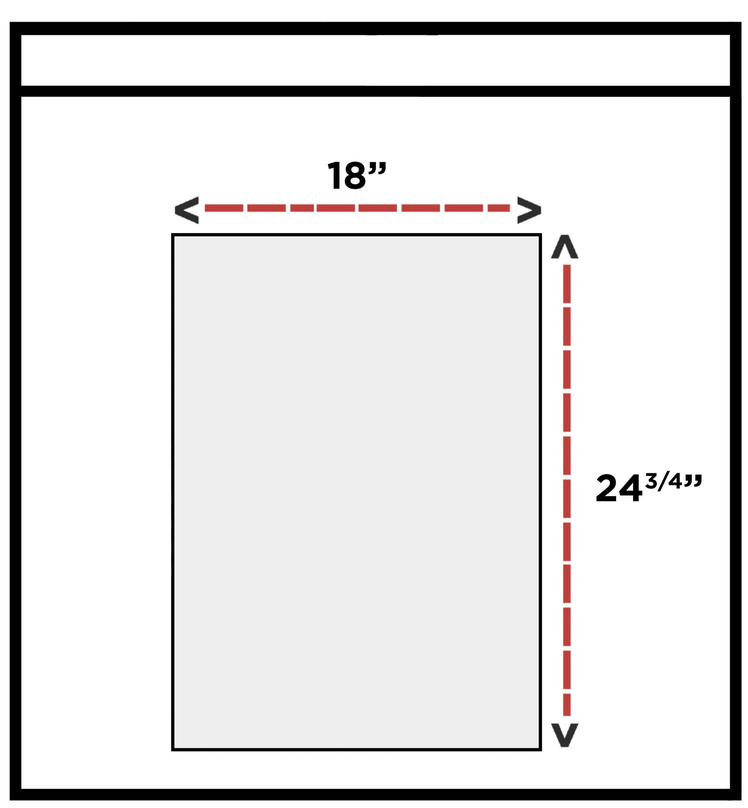
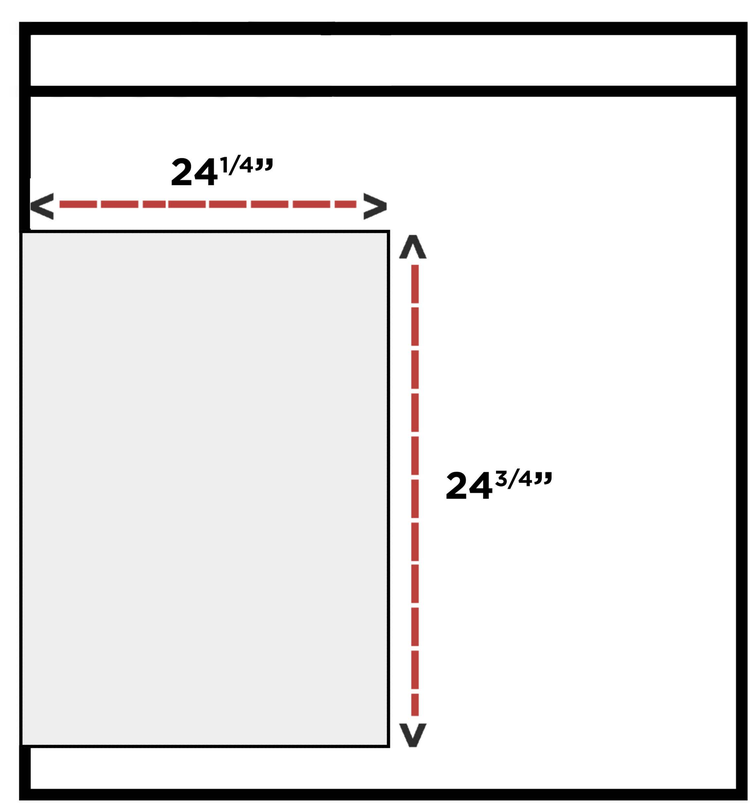
Island Side View