REVISION HISTORY				
REV.	DESCRIPTION	DATE	ECO	BY
A	RELEASED FOR QUOTE	12/12/2017		BUMPHREY

MIRROR NUMBER:

MADE FROM: 00016778

CHECK IN DATE/TIME: Tuesday, December 12, 2017 4:59:03 PM

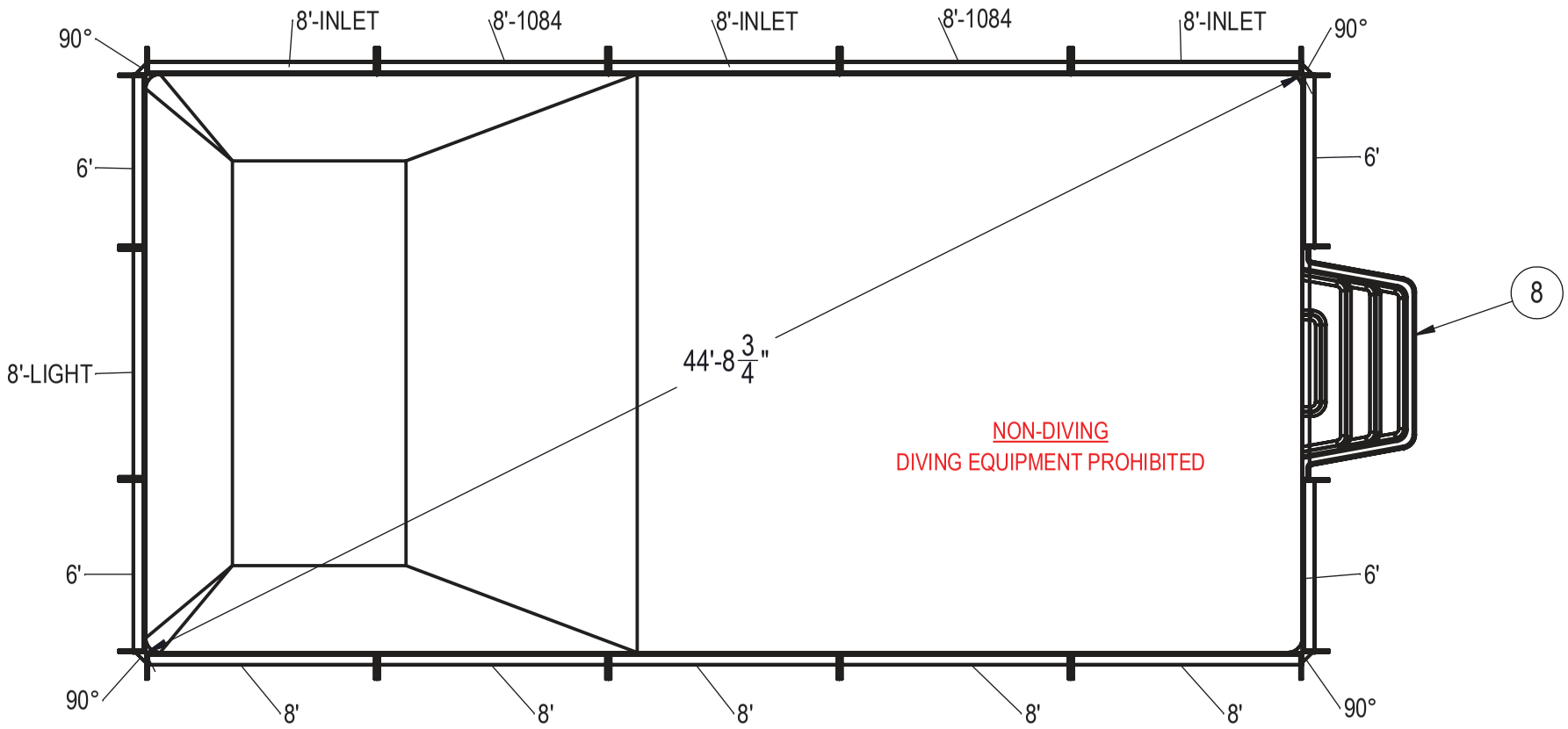

NOTES:

1. THESE ARE FINISHED DIMENSIONS READY FOR THE LINER.
2. DIMENSIONS ARE FROM INSIDE POOL PANELS.
3. ROPE AND FLOAT ASSEMBLY SHOULD BE INSTALLED IN ACCORDANCE WITH CURRENT ANSI/ASPS/ICC REGULATIONS
4. HYDRA LINER TRACK FOR STEPS IS INSTALLED WITH THE BARB FACING THE RISER WALL ON THE STEP.

EXCAVATION NOTES:

5. ROUGH EXCAVATION SHOULD BE 2" DEEPER IN EACH INSTANCE.
6. SOIL TO HAVE MINIMUM BEARING CAPACITY OF 1500 PSF.
7. LOCATE TOP OF POOL AT LEAST 6" ABOVE THE SURROUNDING LAND ELEVATION.
8. SEE "OVER DIG DETAIL" FOR EXCAVATION AROUND POOL.
9. FILL VOIDS UNDER BASE OF PANELS AND TAMP WELL.
10. BACK FILL WITH NON-EXPANSIVE MATERIAL.
11. FOLLOW ALL CURRENT ANSI / APSP / ICC GUIDELINES FOR RESIDENTIAL POOLS

IMPORTANT NOTES:

THIS DOCUMENT IS FOR ILLUSTRATIVE PURPOSES ONLY. THE DEALER OR CONTRACTOR WHO SELLS OR INSTALLS YOUR POOL IS AN INDEPENDENT CONTRACTOR AND IS NOT AN AGENT OF THE MANUFACTURER. THE CONSTRUCTION METHODS ILLUSTRATED HERE ARE SUGGESTIONS AND APPLY ONLY TO NORMAL GROUND CONDITIONS. THERE MAY BE ADDITIONAL PRECAUTIONS AND/OR METHODS OF CONSTRUCTION. PROPER INSTALLATION IS THE RESPONSIBILITY OF THE DEALER/BUILDER/CONTRACTOR.

ITEM	FILE NAME	DESCRIPTION	CUSTOMER DRAWING #	VENDOR PART #	QTY.
1	BOLT, PACK	BOLT, FLANGE, 3/8-16 X 1", PACK (50)	HPS1916	HPS1916	5
2	SBRACE	BRACE, FOLD OVER WITH TURNBUCKLE, STEEL, HPSFOB	HPSFOB	HPSFOB	20
3	PANEL, STRAIGHT	PANEL, 6' LONG, 700 SERIES	HPSE106P	00002731	4
4	PANEL, STRAIGHT	PANEL, 8' LONG, 1084, 700 SERIES	HPSE10884	00004966	2
5	PANEL, STRAIGHT	PANEL, 8' LONG, 700 SERIES	HPSE108P	00004961	5
6	PANEL, STRAIGHT	PANEL, 8' LONG, INLET, 700 SERIES	HPSE108I	00004969	3
7	PANEL, STRAIGHT	PANEL, 8' LONG, LIGHT, 700 SERIES	HPSE108L	00004962	1
8	HS110N	STEP, 8', TWIN SEAT, 4 TREAD	HS110N	HS110N	1
9	PANEL, WEDGE	WEDGE, 2 1/2" X 2 1/2" X 90°	HPSD6CA	00003541	4

ENGINEERING DRAWING NUMBER: 00016927

WEIGHT: lbs
VOLUME: Inch³
COLOR:
HEAT TREAT:
FINISH:
TEXTURE:

UNLESS OTHERWISE SPECIFIED
DIMENSIONS ARE IN INCHES
TOLERANCES
DECIMALS: X ± .1
XX ± .01
XXX ± .001
XXXX ± .0005
ANGULAR: X ± 0.5
THIRD ANGLE PROJECTION

DESIGNED BY: BUMPHREY
CREATION DATE: 2/10/2011
DETAILED BY: BUMPHREY
DETAILED DATE: 12/12/2017
LAST REVISED BY: bumphrey
LAST REVISED DATE: 12/12/2017
MATERIAL:

HYDRA POOLS

TITLE: LAYOUT, 20' X 40' RECTANGLE, 6" RADIUS, 6' DEEP, HS110N, LIGHT, 2-1084, 3-INLET, 700 SERIES

PART NUMBER: 00016927
SCALE: 1:192
SHEET: 1 OF 3
SIZE: A

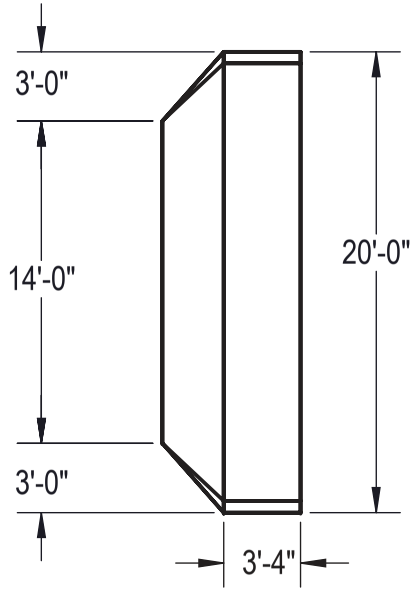

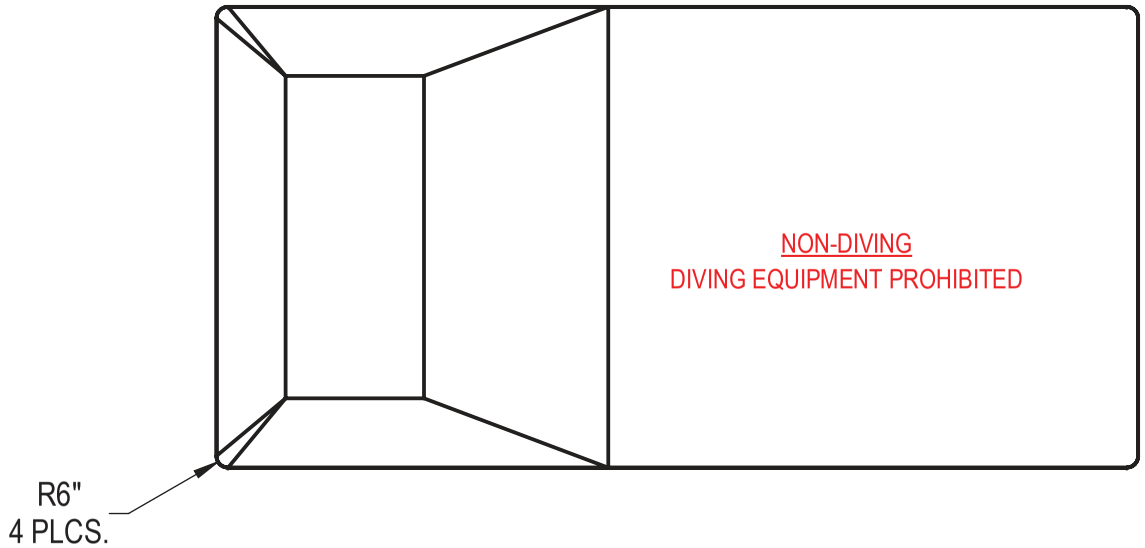

Area: 799.79ft ^2
Perimeter: 119.14ft
Volume = 23952 US gallons

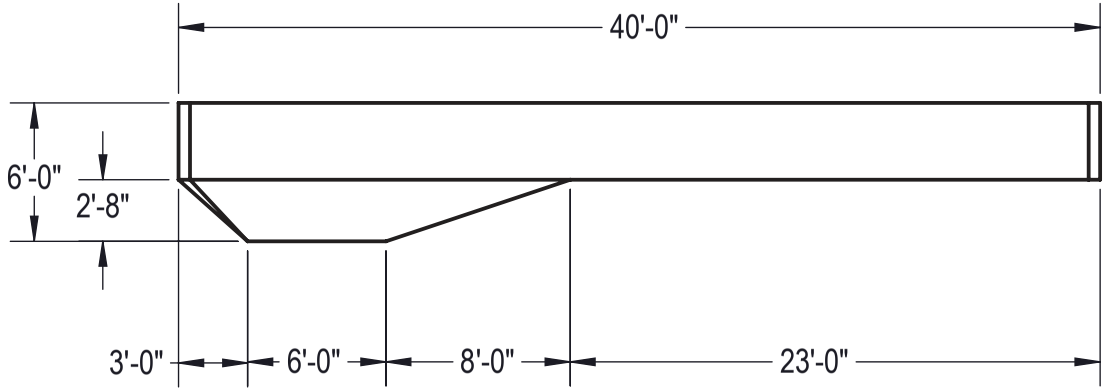

NOTES:

1. THESE ARE FINISHED DIMENSIONS READY FOR THE LINER.
2. DIMENSIONS ARE FROM INSIDE POOL PANELS.
3. ROPE AND FLOAT ASSEMBLY SHOULD BE INSTALLED IN ACCORDANCE WITH CURRENT ANSI/ASPS/ICC REGULATIONS
4. HYDRA LINER TRACK FOR STEPS IS INSTALLED WITH THE BARB FACING THE RISER WALL ON THE STEP.

EXCAVATION NOTES:

5. ROUGH EXCAVATION SHOULD BE 2" DEEPER IN EACH INSTANCE.
6. SOIL TO HAVE MINIMUM BEARING CAPACITY OF 1500 PSF.
7. LOCATE TOP OF POOL AT LEAST 6" ABOVE THE SURROUNDING LAND ELEVATION.
8. SEE "OVER DIG DETAIL" FOR EXCAVATION AROUND POOL.
9. FILL VOIDS UNDER BASE OF PANELS AND TAMP WELL.
10. BACK FILL WITH NON-EXPANSIVE MATERIAL.
11. FOLLOW ALL CURRENT ANSI / APSP / ICC GUIDELINES FOR RESIDENTIAL POOLS

IMPORTANT NOTES:

THIS DOCUMENT IS FOR ILLUSTRATIVE PURPOSES ONLY. THE DEALER OR CONTRACTOR WHO SELLS OR INSTALLS YOUR POOL IS AN INDEPENDENT CONTRACTOR AND IS NOT AN AGENT OF THE MANUFACTURER. THE CONSTRUCTION METHODS ILLUSTRATED HERE ARE SUGGESTIONS AND APPLY ONLY TO NORMAL GROUND CONDITIONS. THERE MAY BE ADDITIONAL PRECAUTIONS AND/OR METHODS OF CONSTRUCTION. PROPER INSTALLATION IS THE RESPONSIBILITY OF THE DEALER/BUILDER/CONTRACTOR.

ENGINEERING DRAWING NUMBER: 00016927

WEIGHT:	lbs
VOLUME:	Inch³
COLOR:	NA
HEAT TREAT:	NA
FINISH:	NA
TEXTURE:	NA

UNLESS OTHERWISE SPECIFIED
DIMENSIONS ARE IN INCHES
TOLERANCES
DECIMALS: X ± .1
XX ± .01
XXX ± .001
XXXX ± .0005
ANGULAR: X ± 0.5
THIRD ANGLE PROJECTION

DESIGNED BY:	BUMPHREY	CREATION DATE:	3/20/2013
DETAILED BY:	BUMPHREY	DETAILED DATE:	12/12/2017
LAST REVISED BY:	bumphrey	LAST REVISED DATE:	12/12/2017
MATERIAL:			

HYDRA POOLS

TITLE: LAYOUT, 20' X 40' RECTANGLE, 6" RADIUS, 6' DEEP, HS110N, LIGHT, 2-1084, 3-INLET, 700 SERIES

PART NUMBER: 00016927

SCALE: 1:192
SHEET: 2 OF 3
SIZE: A

MIRROR NUMBER:
MADE FROM: 00016778
CHECK IN DATE/TIME: Tuesday, December 12, 2017 4:59:03 PM

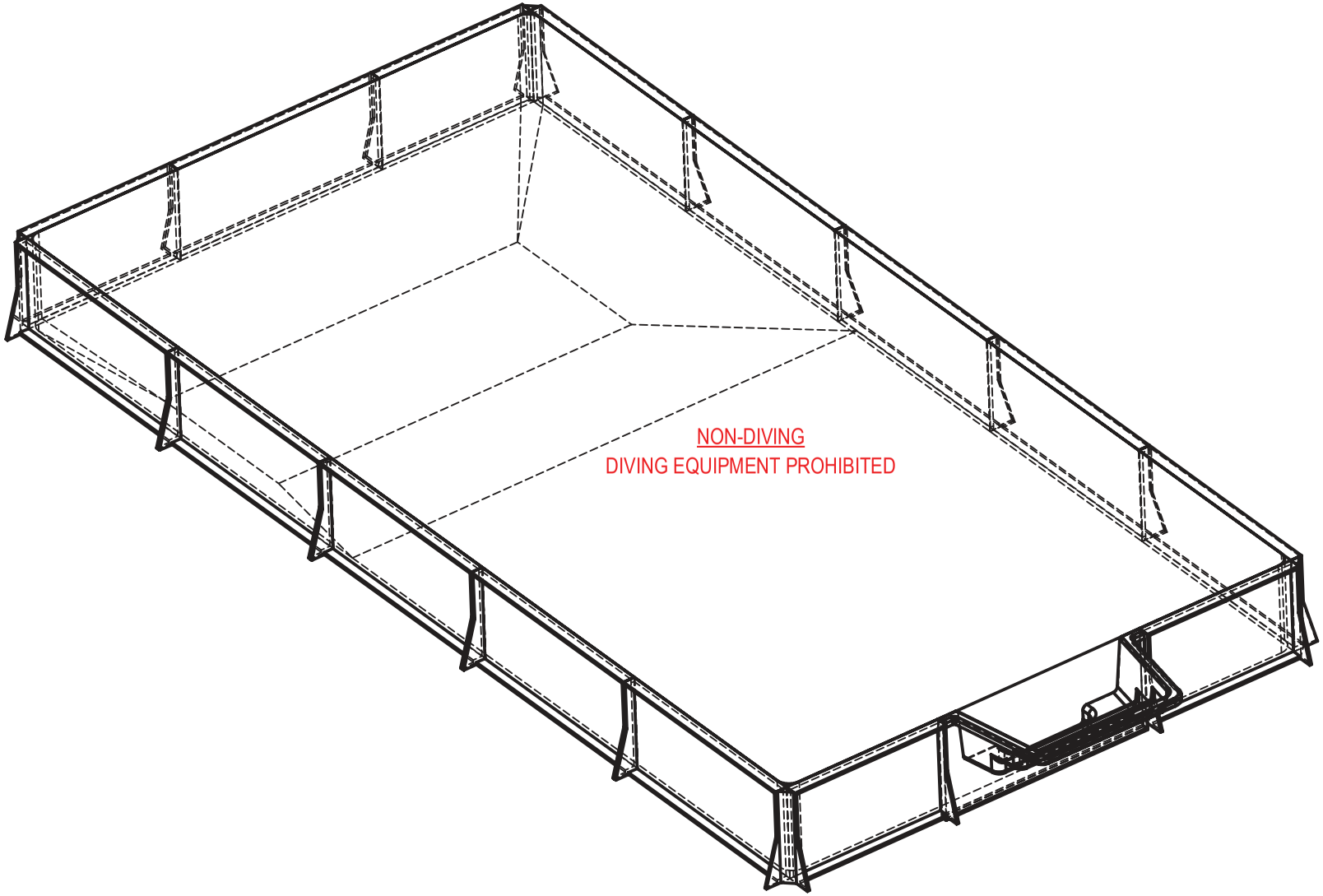

MIRROR NUMBER:

MADE FROM: 00016778

CHECK IN DATE/TIME: Tuesday, December 12, 2017 4:59:03 PM

ENGINEERING DRAWING NUMBER: 00016927

WEIGHT:	lbs
VOLUME:	Inch³
COLOR:	
HEAT TREAT:	
FINISH:	
TEXTURE:	

UNLESS OTHERWISE SPECIFIED

DIMENSIONS ARE IN INCHES
TOLERANCES
DECIMALS: X ± .1
XX ± .01
XXX ± .001
XXXX ± .0005

ANGULAR: X ± 0.5

THIRD ANGLE PROJECTION

DESIGNED BY:	BUMPHREY
CREATION DATE:	2/10/2011
DETAILED BY:	BUMPHREY
DETAILED DATE:	12/12/2017
LAST REVISED BY:	bumphrey
LAST REVISED DATE:	12/12/2017
MATERIAL:	

HYDRA POOLS

TITLE: LAYOUT, 20' X 40' RECTANGLE, 6" RADIUS, 6' DEEP, HS110N, LIGHT, 2-1084, 3-INLET, 700 SERIES

PART NUMBER: 00016927

SCALE: 1:60

SHEET: 3 OF 3

SIZE: A